MONSEN ENGINEERING 1000 3-78 MC 7745

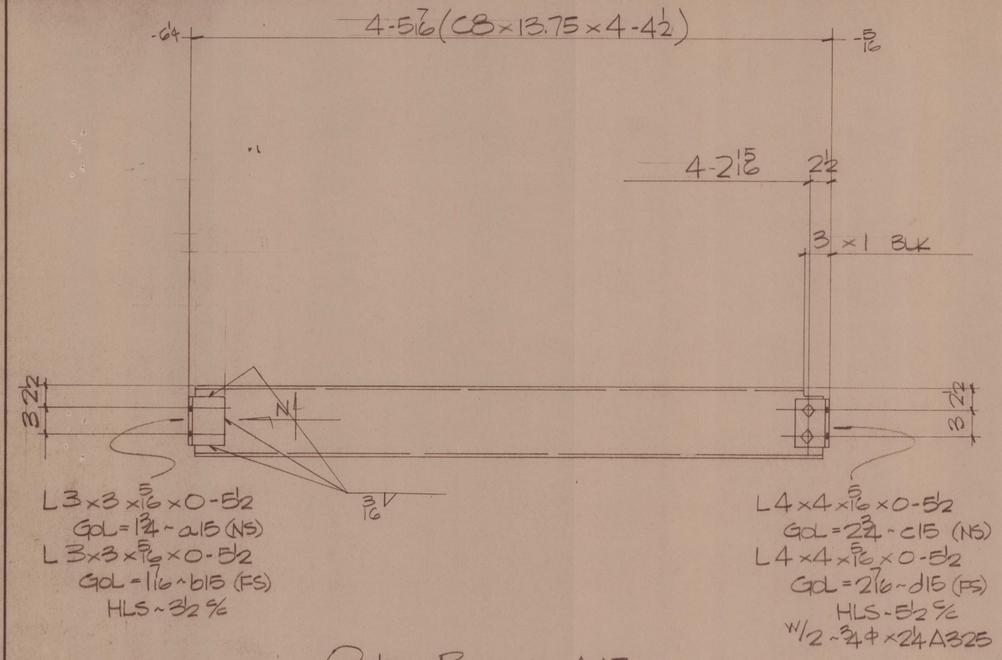

ONE BEAM ~ A15
(EL. 6172-6 4)

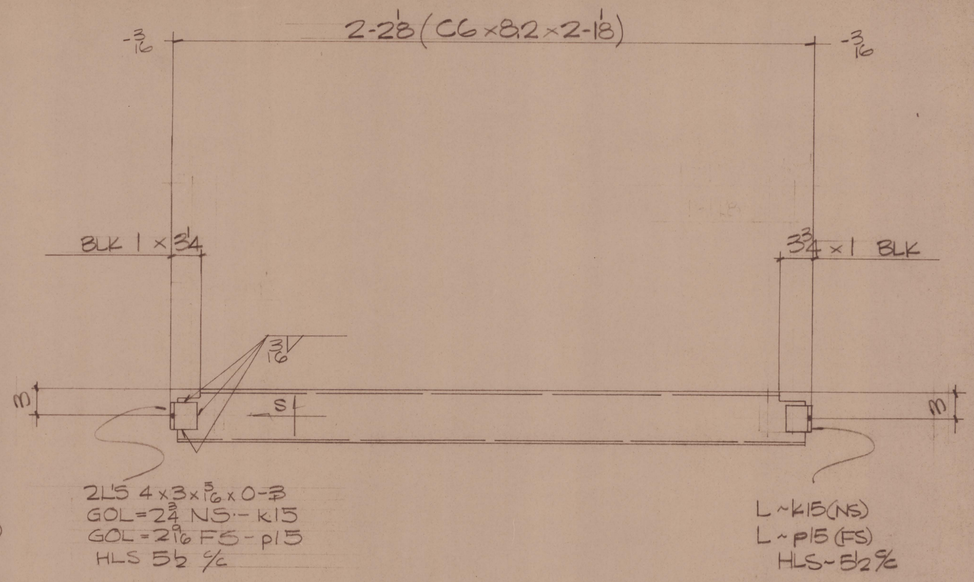

4 BEAMS ~ C15

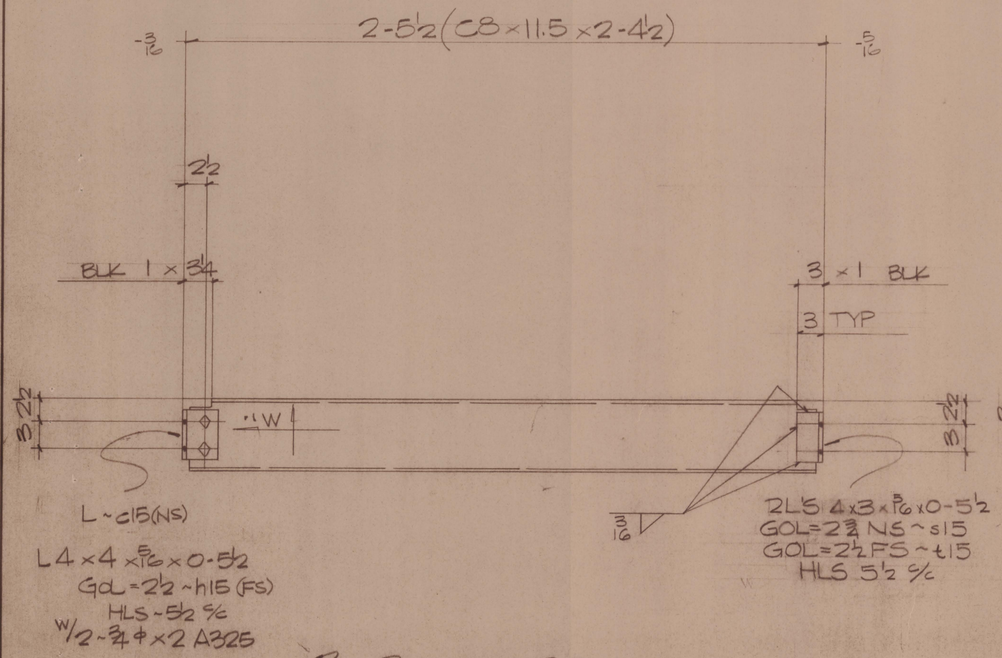

3 BEAMS ~ B15

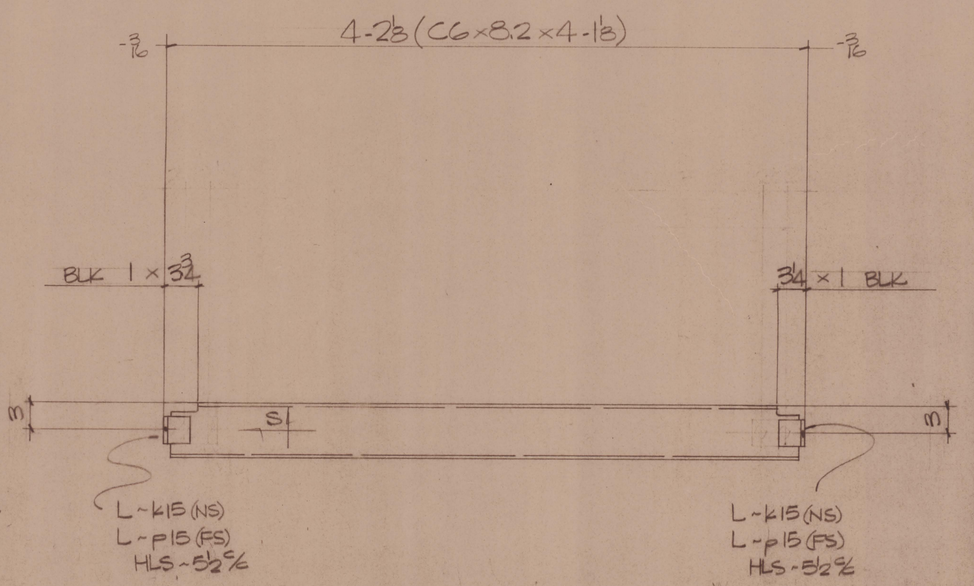

3 BEAMS ~ D15

SHOP BILL

NO.	MK	SECTION	LENGTH FT	LENGTH IN	REMARK	WT.
ONE	A15	C8×13.75	4	4 1/2	Φ	60
1	a15	L3×3×5/16	0	5 1/2	Φ temp	3
1	b15	L3×3×5/16	0	5 1/2	Φ temp	3
1	c15	L4×4×5/16	0	5 1/2	Φ temp	4
1	d15	L4×4×5/16	0	5 1/2	Φ temp	4
2		3/4 Φ A325	0	2 1/4		
3	B15	C8×11.5	2	4 1/2	Φ	81
3	c15	L				11
3	h15	L4×4×5/16	0	5 1/2	Φ temp	11
6		3/4 Φ A325	0	2		
3	s15	L4×3×5/16	0	5 1/2	Φ temp	10
3	t15	L4×3×5/16	0	5 1/2	Φ temp	10
4	C15	C6×8.2	2	1 1/8		68
8	k15	L4×3×5/16	0	3	Φ temp	14
8	p15	L4×3×5/16	0	3	Φ temp	14
3	D15	C6×8.2	4	1 1/8		99
6	k15	L				11
6	p15	L				11

U.C.C. METALS DIV.
Works: EMERSON MINE Bldg. No.:
Vendor: COTTONWOOD STEEL 930-148 & 154
REPLACEMENT OF ORE SCREEN P.O. BC-254-4299
F-11171

UCC. REF: 254-1148
COTTONWOOD STL. REF: E1

78-106

NO.	REVISIONS	BY	CHK	DATE
1				
2				
3				
4				

COTTONWOOD STEEL CORP.
1235 SO. PIONEER RD.
P.O. BOX 27048, S.L.C., UTAH 84125

TUNGSTEN CONCENTRATOR
EMERSON, MINE
TEMPLETE, NEVADA

BEAMS @ EL. 6176-1 1/2 U.N.

DRAWN BY: (B&C) TW DATE: 9/19/78
CHECKED BY: B&C PC DATE: 9-27-78
CONTRACTOR: UNION CARBIDE
HOLES: 13/64 ELECTRODES: E70XX JOB NO 0988 SHT NO 15
PAINT: 1 S/C RED OXIDE PRIMER STEEL SPEC: A36

47901078