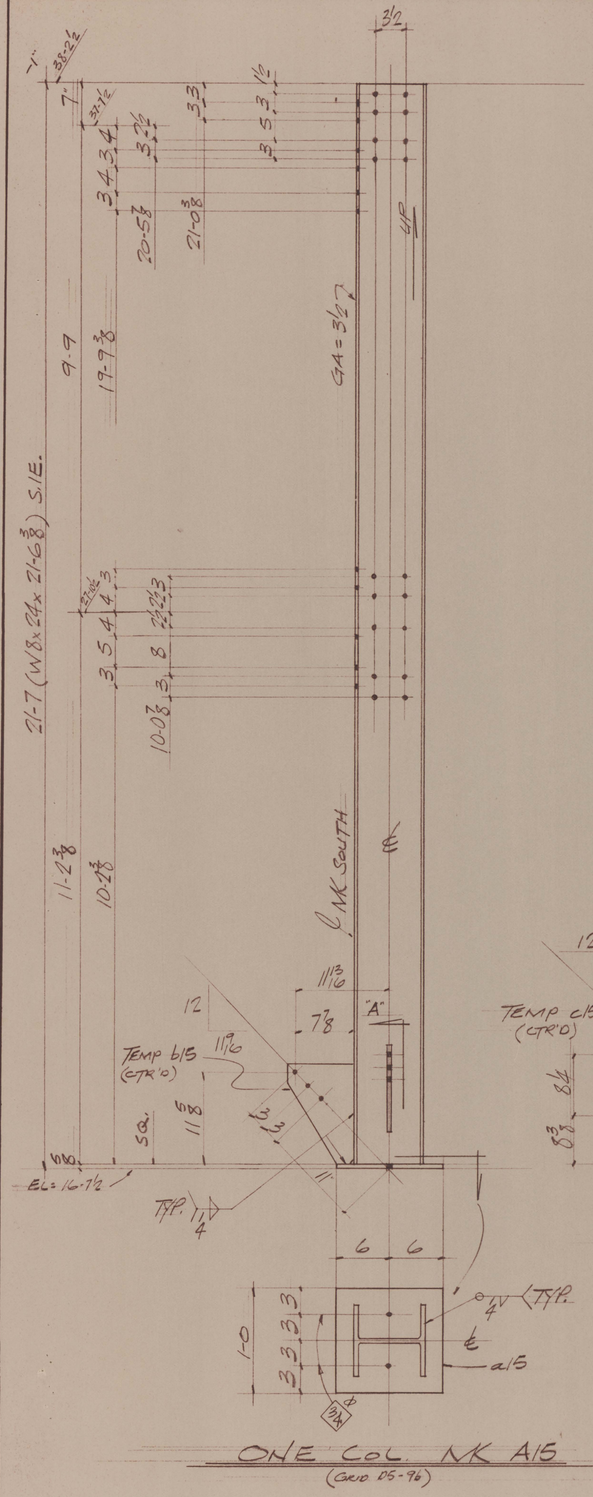

ONE COL. NK A15
(GRID D5-96)

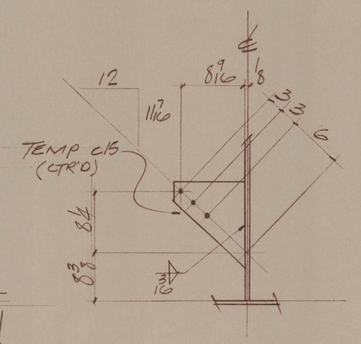

SECTION "A"

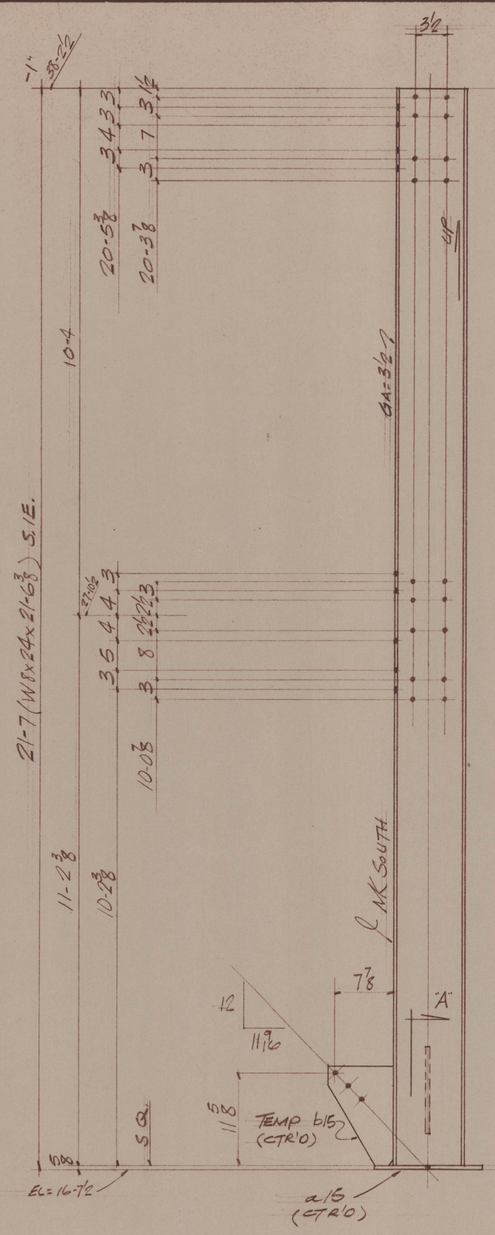

ONE COL. NK B15
(GRID D5-9f)

SHOP BILL OF MATERIAL

NO. PIECES	SECTION	LENGTH FT.	LENGTH INCHES	PIECE MARKS	REMARKS	TOTAL LENGTH OR SQ. FT.	NET WEIGHT UNIT	NET WEIGHT TOTAL	NO. PCS.
1	W8x24	21	6 3/8	A15	S.I.E.				
1	PL 5/8 x 12	1	0	a15					
1	PL 3/8 x 9 1/4	1	1	b15	TEMP				
1	PL 3/8 x 10	1	0 1/4	c15	TEMP				
1	W8x24	21	6 3/8	B15	S.I.E.				
1	PL 5/8 x 12	1	0	a15					
1	PL 3/8 x 9 1/4	1	1	b15	TEMP				
1	PL 3/8 x 10	1	0 1/4	c15	TEMP				

FIELD BOLTS
44 - 3/4 φ A325 x 1 3/4
42 - 3/4 φ A325 x 2

NO PAINT WITHIN
5" OF ALL HOLES

DE BURR ALL HOLES

V-1156- 98-6

Spec. 254-1156-121

REVISIONS NO.	DATE	MADE BY	CHK. BY	DESCRIPTION

REFERENCES: E1, E2, E4, E7

TITAN STEEL CORPORATION
205 East 21st South
Phone (801) 486-0721
P.O. Box 15425
Salt Lake City, Utah 84115

COL. DETAILS
TUNGSTEN CONCENTRATOR
MILL BUILDING FLOTATION AREA

HOLES: 13/16 φ UN
PAINT: POWER TOOL CLEANING 1 S/C PRIMER (SEE SPECS)

ENGINEER: ACRES AMERICAN INC.
CUSTOMER: UNION CARBIDE CORP.
DR. BY: PMD/F.H.
DATE: 4-23-76
CHK'D BY: RO
DATE: 6-29-76
P.O. TE-254-3121
JOB NO.: C-5906
SHEET 15 OF

#321

4790 0715