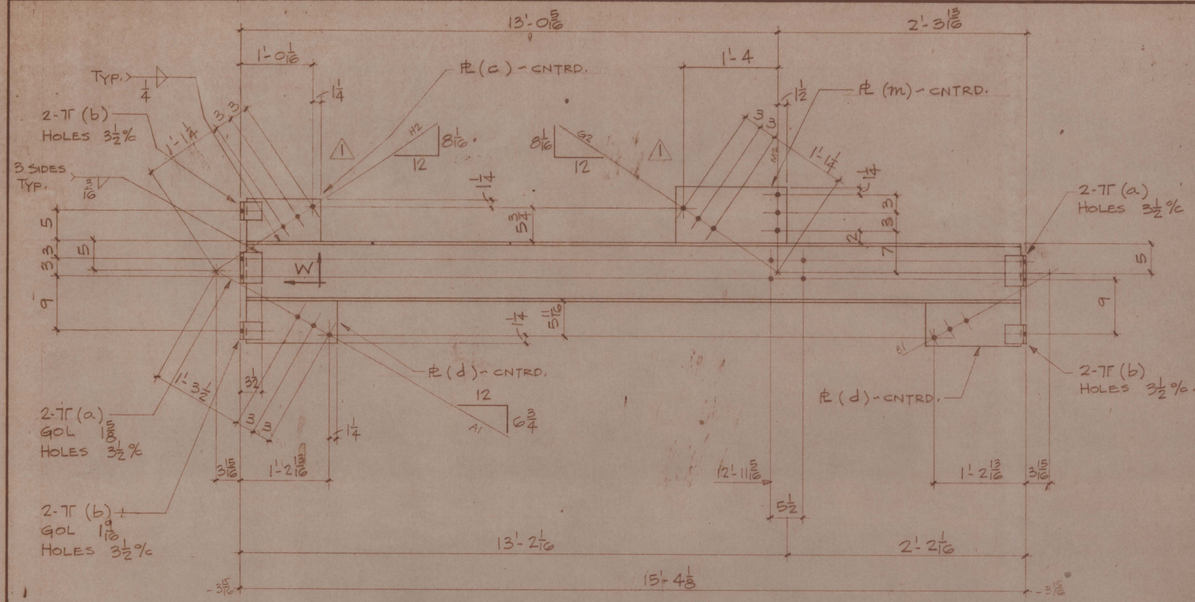

ONE THUS. MK. "A15"

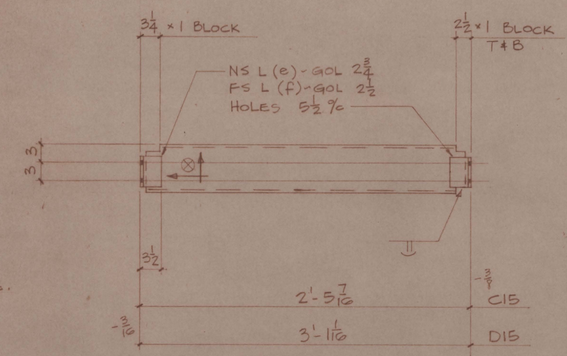

ONE THUS AN. MK. "C15"
ONE OPP, AN. MK. "D15"

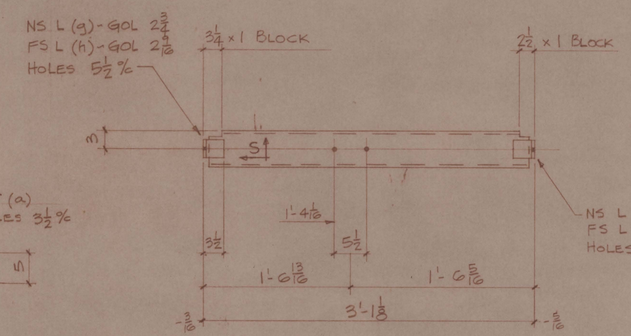

ONE THUS. MK. "E15R"
ONE OPP. MK. "E15L"

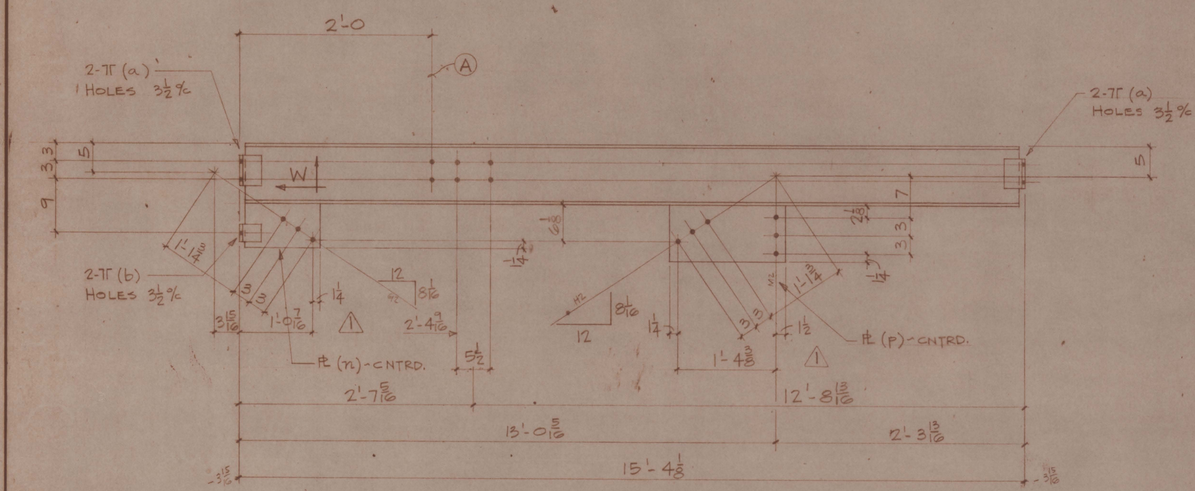

ONE THUS MK. "B15"

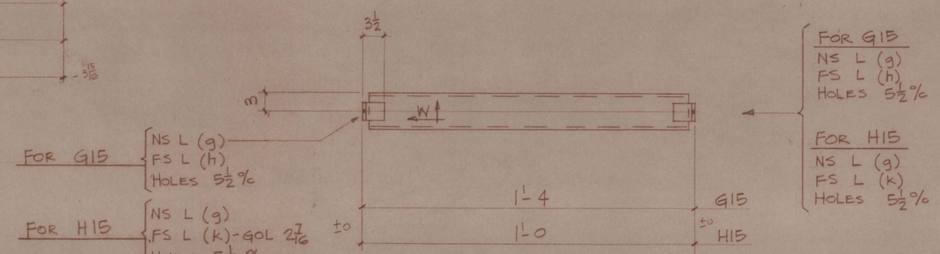

ONE THUS AN. MK. "G15"
ONE " ", MK. "H15"

SEE DWG. #1 FOR GENERAL NOTES

SHOP BILL OF MATERIAL

	NO. PIECES	SECTION	LENGTH FT.	LENGTH INCHES	PIECE MARKS	REMARKS	TOTAL LENGTH OR SQ. FT.	NET WEIGHT UNIT	NET WEIGHT TOTAL	NO. PCS.
MK. "A15"	1	W10 x 21	15	3¼	A15					
	4	L-3½ x 3 x 5/16	0	5	a					
	6	L-3½ x 3 x 5/16	0	3	b					
△1	1	PL-3/8 x 7	1	0 7/8	c					
	2	PL-3/8 x 6 15/16	1	3 5/8	d					
△1	1	PL-3/8 x 9¼	1	6¾	m					
MK. "B15"	1	W10 x 21	15	3¼	B15					
	4				a					
△1	2				b					
	1	PL-3/8 x 7 3/8	1	1¼	n					
△1	1	PL-3/8 x 9 3/8	1	7 1/8	p					
MK. "C15"	1	C8 x 11.5	2	4½	C15					
	2	L-4 x 3½ x 5/16	0	5	e					
	2	L-4 x 3½ x 5/16	0	5	f					
MK. "D15"	1	C8 x 11.5	3	0	D15					
	2				e					
	2				f					
MK. "E15R/L"	1/1	C6 x 8.2	3	0¼	E15R/L					
	4	L-4 x 3½ x 5/16	0	3	g					
	4	L-4 x 3½ x 5/16	0	3	h					
MK. "G15"	1	C6 x 8.2	1	3	G15					
	2				g					
	2				h					
MK. "H15"	1	C6 x 10.5	0	11	H15					
	2				g					
	2	L-4 x 3½ x 5/16	0	3	k					
FIELD BOLTS	40	¾ ⌀ x 2 A325 BOLTS								
	16	¾ ⌀ x 1¾	DO.							

V-1156-97 -3
SPEC. No. 254-1156-122

REVISIONS NO.	DATE	MADE BY	CHK. BY	DESCRIPTION
1	7-7-76	AB	FE	REVISED GST. PLS - PER ENG'RS. REVISION.

REFERENCES: 254-1480, 254-1481

TITAN STEEL CORPORATION
205 East 21st South, Phone (801) 486-0721
P.O. Box 15425, Salt Lake City, Utah 84115

BEAM DETAILS
TUNGSTEN CONCENTRATOR, TEMPIUTE, NEV.
MILL BUILDING, MILL AREA
CYCLONE TOWER

HOLES: 13/16 ⌀
PAINT: POWER TOOL CLEANING 1% PRIMER SEE SPECS.

ENGINEER: ACRES AMERICAN INCORPORATED
CUSTOMER: UNION CARBIDE CORP.
DR. BY: A+P/AB | DATE: 5-20-76 | CHK'D BY: FE | DATE: 7-2-76
P.O. TE-254-3266
JOB NO.: C5966
SHEET 15 OF

47900351