60001400

Mining District File Summary Sheet

DISTRICT	Rosebud
DIST_NO	4010
COUNTY If different from written on document	Pershing
TITLE If not obvious	Rosebud Drill Hole File - Hole No. RL-174
AUTHOR	T. Kuhl; C Walck; K. Gammon; B. Thomas; G. MacVeigh; Rogowski
DATE OF DOC(S)	1991, 1999
MULTI_DIST Y / (N?) Additional Dist_Nos:	
QUAD_NAME	Sulphur 7.5'
P_M_C_NAME (mine, claim & company names)	Rosebud Mine; Rosebud Project; Stevens Drilling Lac Minerals (USA) Inc; Bondar-Clegg Inc Chemex Labs, Inc
COMMODITY If not obvious	gold silver
NOTES	Drill log; geology; assay; total depth 500' handwritten notes; geochemistry 20p.

Keep docs at about 250 pages if no oversized maps attached (for every 1 oversized page (>11x17) with text reduce the amount of pages by ~25)

	Initials	Date
SS:	DD	5/20/08
DB:	mah	
SCANNED:		

Revised: 1/22/08

DRILL LOGS RL-174
Rosebud

60001400 4010

60001400

LAC MINERALS (U.S.A.) INC.

DRILL LOG SUMMARY SHEET

PROJECT Rosebud

HOLE NUMBER RL-174 TOTAL DEPTH 500' LOGGED BY RKS

Date started 5/3/91

Date completed 5/4/91

Initial bearing —

Initial inclination -90°

Elevation 5172.9

Collar coordinates:

N 2203225.0

E 4804261.1

Contractor: Stevens

Drill Type: RC

Hole Size: 4.5"

Drilling Conditions: Bueno

Footage: Wet / Dry 0 - 130 dry

130 - 500 wet

Comments:

DOWN HOLE SURVEY INFORMATION

FROM	TO	SURVEY POINT	INCLI-NATION	BEARING	X (Northing)	Y (Easting)	Z (Elevation)

LAC MINERALS (U.S.A.) INC.
ROSEBUD PROJECT

DRILL HOLE RL-174

Page 1 of ____

FINE-GRAINED TUFF
LITHIC LAPILLI TUFF

ARGILLIC
XX SILICIFICATION
OX OXIDIZED
DRUZY QUARTZ
XC CHALCEDONIC QUARTZ
XK STOCKWORK QUARTZ
P P P PROPYLITIZATION
Ca CALCITE

LOGGED BY _____

5/3/91

	LITH.	ALT.	% ARG. ALT. W	M	S	% SIL'N W	M	S	COLOR	% FeOx W	M	S	% SULF.	COMMENTS Start 3:45 pm	Au	Ag	CHECK	% WASH RECOV.
														OB - Qal	<	<		
05																		
														Bedrock @ 8'		.05		
10									Yllw									
														Clay - Protolith ? w/ contam from last hole		.03		
15									Yllw Org									
														(w/ ~ 5% Green Contam.)		.04		
20																		
																.05		
25																		
		X X							Yllw Org Peach						.004	.11		
30														Clean smpls				
		X X							lt Grey						.005	.10		
35																		
		X X													<	.06		
40																		
		X X												(very damp clay)	<	.05		
45																		
									Yllw lt Grey Org						<	.04		
50																		
															.003	.03		
55																		
															<	.04		
60																		
									Org lt grey						<	.07		
65																		
									& red					oxides (water in hole this morning) 5/3/91 5/4/91	.003	.04		
70																		
									lt Grey Brn-red				1	sulfides (1st sulfide)	.003	.04		
75																		
									lt Grey lt Grey-Grn				2		.003	.08		
80																		
													1		<	.06		
85																		
									& grn-org							.03		
90																		
																.04		
95																		
00																.06		

LAC MINERALS (U.S.A.) INC.
ROSEBUD PROJECT

FINE-GRAINED TUFF
LITHIC LAPILLI TUFF

ARGILLIC
XX SILICIFICATION
OX OXIDIZED
DRUZY QUARTZ
XC CHALCEDONIC QUARTZ
XK STOCKWORK QUARTZ
P P P PROPYLITIZATION
Ca CALCITE

DRILL HOLE RL-174

Page 2 of ____

LOGGED BY _____

frat

	LITH.	ALT.	% ARG. ALT. W	M	S	% SIL'N W	M	S	COLOR	% FeOx W	M	S	% SULF.	COMMENTS	Au	Ag	CHECK	% WASH RECOV
									lt-Grey Dk Grey				1	Fgrn tuff - Dozer (?) Protolith very difficult to determine	<	.08		
105													2	(w/ wht Kaolinite vn)		.06		
110									& lt Grn							.04		
115																.05		
120																.05		
125													1	H_2O		.05		
130													2			.07		
135													2			.05		
140													1			.03		
145													2			.04		
150													1			.03		
155													1			.04		
160													1			<		
165									lt Green lt Grey				1			.06		
170													1	(w/minor Kaolinite vn)		.03		
175																.03		
180																.03		
185																<		
190																<		
195																.03		
200																		

LAC MINERALS (U.S.A.) INC.
ROSEBUD PROJECT

DRILL HOLE RL-174

Page 3 of ____

FINE-GRAINED TUFF
LITHIC LAPILLI TUFF

ARGILLIC
SILICIFICATION
OXIDIZED
DRUZY QUARTZ
CHALCEDONIC QUARTZ
STOCKWORK QUARTZ
PROPYLITIZATION
CALCITE

LOGGED BY _____

	LITH.	ALT.	% ARG. ALT. W	M	S	% SIL'N W	M	S	COLOR	% FeOx W	M	S	% SULF.	COMMENTS	Au	Ag	CHECK	% WASH RECOV.
		X							lt Green lt Grey				1	SAA - Dozer Tuff	<	<		
205													.5	(weaker alt.)				
210													.5	(trace calc.) (trace kaol)				
215													.5					
220													.5					
225		X X											1	(Stiger alt)				
230		X X											2					
235		X X											1					
240		X X											1					
245													1		.003			
250													.5		<			
255													1					
260									lt Green				.5	(w/ calcite vn)				
265																		
270																		
275									lt Green lt Grey									
280									lt Green									
285																		
290																		
295									Drk Grey					w/ calc and slight incr in sulfides				
300																		

LAC MINERALS (U.S.A.) INC.
ROSEBUD PROJECT

DRILL HOLE RL-179

Page 4 of ____

LOGGED BY _____

FINE-GRAINED TUFF
LITHIC LAPILLI TUFF

ARGILLIC
XX SILICIFICATION
OX OXIDIZED
DRUZY QUARTZ
XC CHALCEDONIC QUARTZ
XK STOCKWORK QUARTZ
P P P PROPYLITIZATION
Ca CALCITE

	LITH.	ALT.	% ARG. ALT. W	M	S	% SIL'N W	M	S	COLOR	% FeOx W	M	S	% SULF.	COMMENTS	Au	Ag	CHECK	% WASH RECOV.
Frax									lt Green Grey				.5	SAA - Dozer Tuff	<	<		
305 more H_2O																		
310		x							lt Green						.003	.03		
315		x													<	<		
320																		
325									lt Green Grey									
Frax 330																		
335																		
340															.004			
lg. calcite vn. 345									lt Green wht					(w/ ~ 20% calc. vn.)	<			
350														(w/ ~ 2% calc/kaol. vn)		.03		
355														(trace calc. kaol.)		.04		
360									lt Green Grey							.04		
Frax 365																.04		
370																.04		
375															.003	.03		
380														Slight incr. in sulf. strg bleach	.003	.03		
385															.003	.04		
390														contam starting to become a problem at the beginning of each new rod	.006	.04		
395															.030	.05		
400															.010	.03		

LAC MINERALS (U.S.A.) INC.
ROSEBUD PROJECT

DRILL HOLE RL-174

Page 5 of 5

FINE-GRAINED TUFF
LITHIC LAPILLI TUFF

ARGILLIC
XX SILICIFICATION
OX OXIDIZED
DRUZY QUARTZ
XC CHALCEDONIC QUARTZ
XK STOCKWORK QUARTZ
P P P PROPYLITIZATION
Ca CALCITE

LOGGED BY _____

	LITH.	ALT.	% ARG. ALT. W	M	S	% SIL'N W	M	S	COLOR	% FeOx W	M	S	% SULF.	COMMENTS	Au	Ag	CHECK	% WASH RECOV.
									lt Grey				.5	SAA - Dozer Tuff (Stg Bleach)	.004	.03		
405																		
410													.5		.003	<		
		X											.5	(w/ calcite vn.)	.015	<		
415									lt Green									
															.004	<		
420									lt Green Green									
															.003	.03		
425														(w/ ~ 3% calc. vn)	<	<		
430																		
435																		
440																		
445																		
450																		
455																		
460														[Busted Hose still drilling 3:30 pm 3:50 start again]				
465																		
470																		
475									wht Green				.1	(weak Bleach & trace calc)				
480																		
485									Blck Green				.5	(w/ 50% Blck to Drk Green carbon like shale)				
490									lt Green Green									
495																		
500																		
														TD @ 6:00 pm				

400 ft for the day at this pt.

RL-174

Section 400 SW ; 780 NW

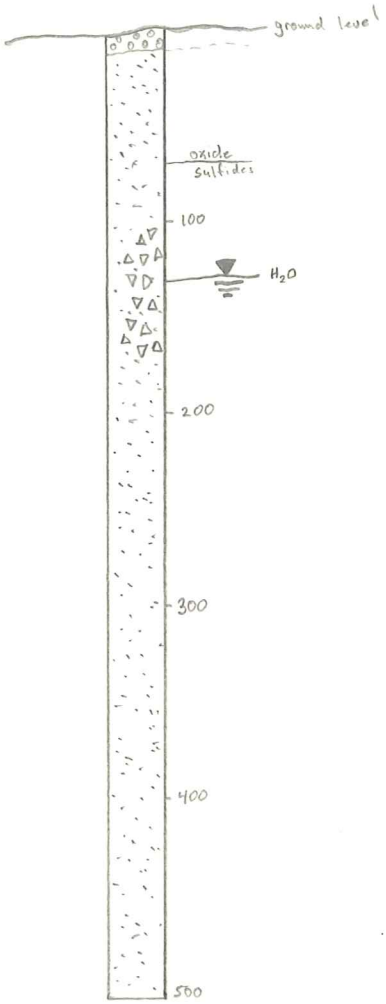

T.D. = 500'

0 - 8' O.B. (Qal)

8 - 500' Dozer tuff (?)

N- 2,203,225.0
E- 480,426.1

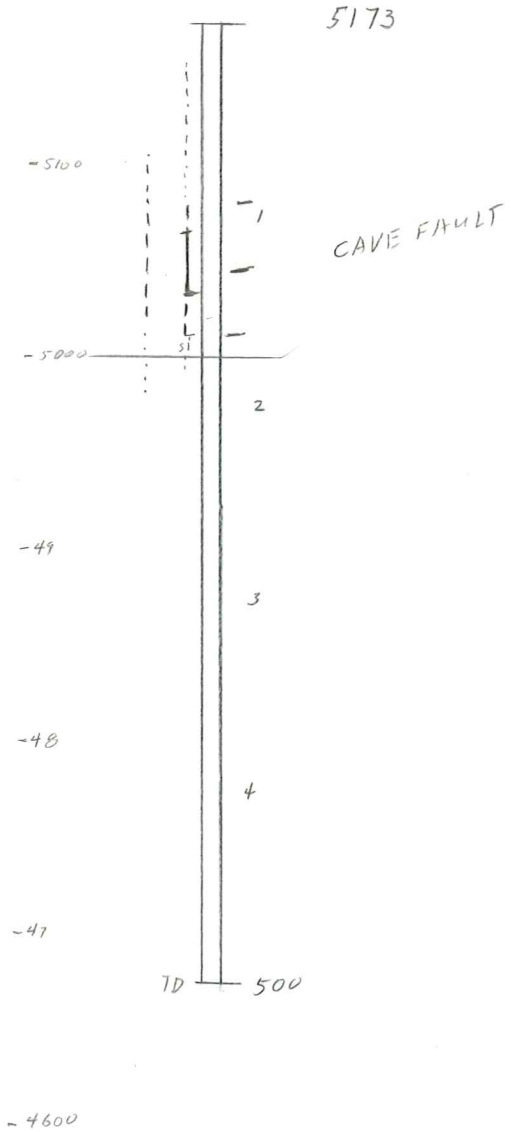

Rosebud
RL-174
1"=100'
Rogowski May 99

Bondar-Clegg, Inc.
625 Spice Island Dr.
Building 1, Unit A
Sparks, Nevada 89431
702 (359-9330)

Controlled TOK

BC BONDAR-CLEGG

Geochemical Lab Report

A DIVISION OF INCHCAPE INSPECTION & TESTING SERVICES

MAY 23 1991

REPORT: R91-10826.4 (COMPLETE)

REFERENCE INFO: RL174 D-500

CLIENT: LAC MINERALS (USA) INC.
PROJECT: ROSEBUD

SUBMITTED BY: KUHL
DATE PRINTED: 21-MAY-91

ORDER	ELEMENT		NUMBER OF ANALYSES	LOWER DETECTION LIMIT	EXTRACTION	METHOD
1	Au	Gold	105	0.002 OPT		Fire Assay
2	Ag	Silver	105	0.02 OPT		Fire Assay

SAMPLE TYPES	NUMBER	SIZE FRACTIONS	NUMBER	SAMPLE PREPARATIONS	NUMBER
Z OTHER DRILL TYPES	100	2 -150	100	CRUSH,PULVERIZE -150	100
P PREPARED PULP	5	4 AS REC'D	5	AS RECEIVED, NO SP	5
				OVERWEIGHT/LBS	42
				EXCESS WETNESS/SAMP	26

NOTES: # indicates ERRATIC RESULTS

REMARKS: #ERRATIC RESULTS OBSERVED ON THE FOLLOWING:
RL-174 385-390--.011 AND .087 OPT.

REPORT COPIES TO: MS. CYNDIE WALCK
~~MR. TIM KUHL~~
MR. TIM KUHL

INVOICE TO: MR. TIM KUHL

Kenneth D. Hammon

Bondar-Clegg, Inc.
625 Spice Island Dr.
Building 1, Unit A
Sparks, Nevada 89431
702 (359-9330)

BONDAR-CLEGG

A DIVISION OF INCHCAPE INSPECTION & TESTING SERVICES

Geochemical Lab Report

DATE PRINTED: 21-MAY-91

REPORT: R91-10826.4 (COMPLETE)

PROJECT: ROSEBUD

SAMPLE NUMBER	ELEMENT UNITS	Au OPT	Ag OPT
Z2 RL-174 0-5		<0.002	<0.02
Z2 RL-174 5-10		<0.002	0.05
Z2 RL-174 10-15		<0.002	0.03
Z2 RL-174 15-20		<0.002	0.04
Z2 RL-174 20-25		<0.002	0.05
Z2 RL-174 25-30		0.004	0.11
Z2 RL-174 30-35		0.005	0.10
Z2 RL-174 35-40		<0.002	0.06
Z2 RL-174 40-45		<0.002	0.05
Z2 RL-174 45-50		<0.002	0.04
Z2 RL-174 50-55		0.003	0.03
Z2 RL-174 55-60		<0.002	0.04
Z2 RL-174 60-65		<0.002	0.07
Z2 RL-174 65-70		0.003	0.04
Z2 RL-174 70-75		0.003	0.04
Z2 RL-174 75-80		0.003	0.08
Z2 RL-174 80-85		<0.002	0.06
Z2 RL-174 85-90		<0.002	0.03
Z2 RL-174 90-95		<0.002	0.04
Z2 RL-174 95-100		<0.002	0.06
,032 P4 BA-36		0.036	0.20
Z2 RL-174 100-105		<0.002	0.08
Z2 RL-174 105-110		<0.002	0.06
Z2 RL-174 110-115		<0.002	0.04
Z2 RL-174 115-120		<0.002	0.05
Z2 RL-174 120-125		<0.002	0.05
Z2 RL-174 125-130		<0.002	0.05
Z2 RL-174 130-135		<0.002	0.07
Z2 RL-174 135-140		<0.002	0.05
Z2 RL-174 140-145		<0.002	0.03
Z2 RL-174 145-150		<0.002	0.04
Z2 RL-174 150-155		<0.002	0.03
Z2 RL-174 155-160		<0.002	0.04
Z2 RL-174 160-165		<0.002	<0.02
Z2 RL-174 165-170		<0.002	0.06
Z2 RL-174 170-175		<0.002	0.03
Z2 RL-174 175-180		<0.002	0.03
Z2 RL-174 180-185		<0.002	0.03
Z2 RL-174 185-190		<0.002	<0.02
Z2 RL-174 190-195		<0.002	<0.02

SAMPLE NUMBER	ELEMENT UNITS	Au OPT	Ag OPT
Z2 RL-174 195-200		<0.002	0.03
,019 P4 BA-37		0.022	0.10
Z2 RL-174 200-205		<0.002	<0.02
Z2 RL-174 205-210		<0.002	<0.02
Z2 RL-174 210-215		<0.002	<0.02
Z2 RL-174 215-220		<0.002	<0.02
Z2 RL-174 220-225		<0.002	<0.02
Z2 RL-174 225-230		<0.002	<0.02
Z2 RL-174 230-235		<0.002	<0.02
Z2 RL-174 235-340		<0.002	<0.02
Z2 RL-174 240-245		<0.002	<0.02
Z2 RL-174 245-250		0.003	<0.02
Z2 RL-174 250-255		<0.002	<0.02
Z2 RL-174 255-260		<0.002	<0.02
Z2 RL-174 260-265		<0.002	<0.02
Z2 RL-174 265-270		<0.002	<0.02
Z2 RL-174 270-275		<0.002	<0.02
Z2 RL-174 275-280		<0.002	<0.02
Z2 RL-174 280-285		<0.002	<0.02
Z2 RL-174 285-290		<0.002	<0.02
Z2 RL-174 290-295		<0.002	<0.02
Z2 RL-174 295-300		<0.002	<0.02
,028 P4 BA-38		0.031	0.12
Z2 RL-174 300-305		<0.002	<0.02
Z2 RL-174 305-310		0.003	0.03
Z2 RL-174 310-315		<0.002	<0.02
Z2 RL-174 315-320		<0.002	<0.02
Z2 RL-174 320-325		<0.002	<0.02
Z2 RL-174 325-330		<0.002	<0.02
Z2 RL-174 330-335		<0.002	<0.02
Z2 RL-174 335-340		0.004	<0.02
Z2 RL-174 340-345		<0.002	<0.02
Z2 RL-174 345-350		<0.002	0.03
Z2 RL-174 350-355		<0.002	0.04
Z2 RL-174 355-360		<0.002	0.04
Z2 RL-174 360-365		<0.002	0.04
Z2 RL-174 365-370		<0.002	0.04
Z2 RL-174 370-375		0.003	0.03
Z2 RL-174 375-380		0.003	0.03
Z2 RL-174 380-385		0.003	0.04

Bondar-Clegg, Inc.
625 Spice Island Dr.
Building 1, Unit A
Sparks, Nevada 89431
702 (359-9330)

BONDAR-CLEGG

A DIVISION OF INCHCAPE INSPECTION & TESTING SERVICES

Geochemical Lab Report

DATE PRINTED: 21-MAY-91

REPORT: R91-10826.4 (COMPLETE)

PROJECT: ROSEBUD

SAMPLE NUMBER	ELEMENT UNITS	Au OPT	Ag OPT
Z2 RL-174 385-390		0.0064	0.04
Z2 RL-174 390-395		0.038	0.05
Z2 RL-174 395-400		0.010	0.03
.028 P4 BA-39		0.036	0.22
Z2 RL-174 400-405		0.004	0.03
Z2 RL-174 405-410		0.003	<0.02
Z2 RL-174 410-415		0.015	<0.02
Z2 RL-174 415-420		0.004	<0.02
Z2 RL-174 420-425		0.003	0.03
Z2 RL-174 425-430		<0.002	<0.02
Z2 RL-174 430-435		<0.002	<0.02
Z2 RL-174 435-440		<0.002	<0.02
Z2 RL-174 440-445		<0.002	<0.02
Z2 RL-174 445-450		<0.002	<0.02
Z2 RL-174 450-455		<0.002	<0.02
Z2 RL-174 455-460		<0.002	<0.02
Z2 RL-174 460-465		<0.002	<0.02
Z2 RL-174 465-470		<0.002	<0.02
Z2 RL-174 470-475		<0.002	<0.02
Z2 RL-174 475-480		<0.002	<0.02
Z2 RL-174 480-485		<0.002	<0.02
Z2 RL-174 485-490		<0.002	<0.02
Z2 RL-174 490-495		<0.002	<0.02
Z2 RL-174 495-500		<0.002	<0.02
.019 P4 BA-40		0.018	0.10

Bondar-Clegg, Inc.
625 Spice Island Dr.
Building 1, Unit A
Sparks, Nevada 89431
702 (359-9330)

BONDAR-CLEGG

A DIVISION OF INCHCAPE INSPECTION & TESTING SERVICES

Geochemical Lab Report

DATE PRINTED: 21-MAY-91

REPORT: R91-10826.4 (COMPLETE)

PROJECT: ROSEBUD

STANDARD NAME	ELEMENT UNITS	Au OPT	Ag OPT
PD SYN STD AU/AG		0.043	0.42
PD SYN STD AU/AG		0.043	0.45
PD SYN STD AU/AG		0.040	0.41
Number of Analyses		3	3
Mean Value		0.0420	0.427
Standard Deviation		0.00173	0.0208
Accepted Value		0.040	0.40
ANALYTICAL BLANK		<0.002	<0.02
ANALYTICAL BLANK		<0.002	<0.02
Number of Analyses		2	2
Mean Value		0.0010	0.010
Standard Deviation		0.00000	0.0000
Accepted Value		0.002	0.02

Bondar-Clegg, Inc.
625 Spice Island Dr.
Building 1, Unit A
Sparks, Nevada 89431
702 (359-9330)

BONDAR-CLEGG

A DIVISION OF INCHCAPE INSPECTION & TESTING SERVICES

Geochemical Lab Report

DATE PRINTED: 21-MAY-91

REPORT: R91-10826.4 (COMPLETE)

PROJECT: ROSEBUD

SAMPLE NUMBER	ELEMENT UNITS	Au OPT	Ag OPT
RL-174 30-35		0.005	0.10
Duplicate		0.005	0.13
Prep Duplicate		0.005	0.13
RL-174 80-85		<0.002	0.06
Duplicate		<0.002	0.05
RL-174 135-140		<0.002	0.05
Duplicate		<0.002	0.05
RL-174 185-190		<0.002	<0.02
Duplicate		<0.002	<0.02
RL-174 235-340		<0.002	<0.02
Duplicate		<0.002	<0.02
RL-174 285-290		<0.002	<0.02
Duplicate		<0.002	<0.02
RL-174 305-310		0.003	0.03
Prep Duplicate		0.003	<0.02
RL-174 340-345		<0.002	<0.02
Duplicate		<0.002	<0.02
RL-174 385-390		0.006#	0.04
Duplicate		0.012	0.05
RL-174 440-445		<0.002	<0.02
Duplicate		<0.002	<0.02
RL-174 490-495		<0.002	<0.02
Duplicate		<0.002	<0.02
RL-174 495-500		<0.002	<0.02
Prep Duplicate		<0.002	<0.02
Duplicate		<0.002	<0.02

Chemex Labs Inc.

Analytical Chemists * Geochemists * Registered Assayers
994 West Glendale Ave., Suite 7, Sparks,
Nevada, U.S.A. 89431
PHONE: 702-356-5395

To: LAC MINERALS U.S.A. INC

1395 GREG ST., STE 107
SPARKS, NEVADA
89431

INVOICE NUMBER I9114884

BILLING INFORMATION

Date: 23-MAY-91
Project:
P.O. No.:
Account: IZR

Comments:

Billing: For analysis performed on Certificate A9114884

Terms: Payment due on receipt of invoice 1.5% per month (18% per annum) charged on overdue accounts

Please Remit Payments to:

CHEMEX LABS, INC.
994 West Glendale Ave.,
Suite 7, Sparks, Nevada,
U.S.A. 89431

COPY

# OF SAMPLES	ANALYSED FOR CODE - DESCRIPTION	UNIT PRICE	SAMPLE PRICE	AMOUNT
11	205 - Geochem - RING	1.65		
	294 - 0-10 lb Crush + split	2.25		
	ROCK-20	8.75	12.65	139.15
8	205 - Geochem - RING	1.65		
	272 - 11-20 lb Crush + split	4.00		
	ROCK-20	8.75	14.40	115.20
			Total Cost $	254.35
			TOTAL PAYABLE (U.S.) $	254.35

Pd LAC.

Chemex Labs Inc.

Analytical Chemists * Geochemists * Registered Assayers
994 West Glendale Ave., Suite 7, Sparks,
Nevada, U.S.A. 89431
PHONE: 702-356-5395

To: LAC MINERALS U.S.A. INC

1395 GREG ST., STE 107
SPARKS, NEVADA
89431

A9114884

Comments: ATTN: BOB THOMAS CC: GARFIELD MACVEIGH

CERTIFICATE A9114884

LAC MINERALS U.S.A. INC

Project:
P.O. # :

Samples submitted to our lab in Sparks, NV.
This report was printed on 23-MAY-91.

SAMPLE PREPARATION

CHEMEX CODE	NUMBER SAMPLES	DESCRIPTION
205	19	Geochem ring to approx 150 mesh
272	8	Crush and split (11-20 pounds)
294	11	Crush and split (0-10 pounds)
285	19	ICP - HF digestion charge

* NOTE 1:

Code 1000 is used for repeat gold analyses It shows typical sample variability due to coarse gold effects. Each value is correct for its particular subsample.

* NOTE 2:

The 32 element ICP package is suitable for trace metals in soil and rock samples. Elements for which the nitric-aqua regia digestion is possibly incomplete are: Al, Ba, Be, Ca, Cr, Ga, K, La, Mg, Na, Sr, Ti, Tl, W.

ANALYTICAL PROCEDURES

CHEMEX CODE	NUMBER SAMPLES	DESCRIPTION	METHOD	DETECTION LIMIT	UPPER LIMIT
1008	19	Al203 %: 20 element, rock ID	ICP-AES	0.01	50.0
565	19	Ba ppm: 24 element, rock & core	ICP-AES	10	10000
1009	19	CaO%: 20 element, rock ID	ICP-AES	0.01	35.0
563	19	Co ppm: 24 element, rock & core	ICP-AES	1	10000
569	19	Cr ppm: 24 element, rock & core	ICP-AES	1	10000
577	19	Cu ppm: 24 element, rock & core	ICP-AES	1	10000
1010	19	Fe203%: 20 element, rock ID	ICP-AES	0.01	35.0
1011	19	K2O %: 20 element, rock ID	ICP-AES	0.01	10.00
1006	19	La ppm: 20 element, rock ID	ICP-AES	20	10000
1012	19	MgO %: 20 element, rock ID	ICP-AES	0.01	35.0
568	19	Mn ppm: 24 element, rock & core	ICP-AES	5	10000
554	19	Mo ppm: 24 element, rock & core	ICP-AES	1	10000
1013	19	Na2O %: 20 element, rock ID	ICP-AES	0.01	10.00
564	19	Ni ppm: 24 element, rock & core	ICP-AES	1	10000
559	19	P ppm: 24 element, rock & core	ICP-AES	10	10000
1007	19	Pb ppm: 20 element, rock ID	ICP-AES	5	10000
582	19	Sr ppm: 24 element, rock & core	ICP-AES	1	10000
1014	19	TiO2 %: 20 element, rock ID	ICP-AES	0.01	10.00
572	19	V ppm: 24 element, rock & core	ICP-AES	1	10000
558	19	Zn ppm: 24 element, rock & core	ICP-AES	2	10000

Chemex Labs Inc.

Analytical Chemists * Geochemists * Registered Assayers
994 West Glendale Ave., Suite 7, Sparks,
Nevada, U.S.A. 89431
PHONE: 702-356-5395

To: LAC MINERALS U.S.A. INC

1395 GREG ST., STE 107
SPARKS, NEVADA
89431

Project :
Comments: ATTN: BOB THOMAS CC: GARFIELD MACVEIGH

Certificate Date: 23-MAY-91
Invoice No. : I9114884
P.O. Number :

CERTIFICATE OF ANALYSIS A9114884

SAMPLE DESCRIPTION	PREP CODE		Al2O3 % ICP	Ba ppm (ICP)	CaO % ICP	Co ppm (ICP)	Cr ppm (ICP)	Cu ppm (ICP)	Fe2O3 % ICP	K2O % ICP	La ppm ICP	MgO % ICP
RL-174 045-050	205	294	15.85	290	0.34	2	7	25	4.65	3.70	20	0.44
RL-174 095-100	205	294	10.90	460	0.13	4	14	8	2.13	1.30	40	0.14
RL-174 145-150	205	294	12.10	130	0.23	2	15	7	3.07	2.30	60	0.14
RL-174 195-200	205	294	13.25	300	0.21	2	9	3	2.39	2.50	80	0.17
RL-174 295-300	205	294	12.55	650	0.31	2	7	4	2.94	4.20	80	0.21
RL-174 345-350	205	272	10.90	250	5.52	1	8	2	2.92	3.00	60	0.16
RL-174 395-400	205	272	10.15	1480	0.33	1	6	2	3.39	1.70	60	0.14
RL-174 495-500	205	272	11.75	960	2.26	5	22	11	2.58	2.20	20	0.94
RL-175 045-050	205	294	13.55	340	0.07	3	11	10	3.31	3.40	40	0.35
RL-175 095-100	205	294	13.90	380	0.10	8	14	20	2.93	3.00	< 20	0.34
RL-175 195-200	205	272	10.75	300	0.13	4	11	11	3.23	2.40	20	0.14
RL-175 245-250	205	294	11.65	870	0.23	3	10	6	2.39	2.50	60	0.23
RL-175 295-300	205	272	13.35	610	0.17	2	9	4	2.42	4.40	80	0.10
RL-175 345-350	205	294	11.90	420	0.21	2	9	8	2.39	3.30	80	0.14
RL-175 395-400	205	272	13.15	630	1.14	2	7	5	3.19	5.00	80	0.19
RL-175 445-450	205	294	12.05	630	1.19	2	8	5	2.20	4.80	80	0.16
RL-175 495-500	205	272	12.55	400	0.22	2	11	5	2.45	2.10	80	0.13
RL-175 545-550	205	294	13.20	190	0.29	1	10	15	2.90	1.90	60	0.15
RL-175 595-600	205	272	15.30	1020	1.73	15	68	30	5.71	3.00	20	1.56

CERTIFICATION: B. Caufin

Chemex Labs Inc.

Analytical Chemists * Geochemists * Registered Assayers
994 West Glendale Ave., Suite 7, Sparks,
Nevada, U.S.A. 89431
PHONE: 702-356-5395

To: LAC MINERALS U.S.A. INC

1395 GREG ST., STE 107
SPARKS, NEVADA
89431

Project :
Comments: ATTN: BOB THOMAS CC: GARFIELD MACVEIGH

Certificate Date: 23-MAY-91
Invoice No. : I9114884
P.O. Number :

CERTIFICATE OF ANALYSIS A9114884

SAMPLE DESCRIPTION	PREP CODE		Mn ppm (ICP)	Mo ppm (ICP)	Na20 % ICP	Ni ppm (ICP)	P ppm (ICP)	Pb ppm (ICP)	Sr ppm (ICP)	Ti02 % ICP	V ppm (ICP)	Zn ppm (ICP)
RL-174 045-050	205	294	80	1	0.40	1	330	95	242	0.35	2	108
RL-174 095-100	205	294	55	2	0.18	8	250	20	159	0.10	< 1	98
RL-174 145-150	205	294	95	2	0.23	5	60	30	47	0.10	< 1	100
RL-174 195-200	205	294	380	3	0.22	3	120	5	25	0.11	< 1	90
RL-174 295-300	205	294	360	2	0.67	3	100	10	41	0.10	< 1	126
RL-174 345-350	205	272	1095	3	0.23	1	90	25	166	0.07	< 1	106
RL-174 395-400	205	272	275	6	0.20	3	90	20	36	0.08	< 1	92
RL-174 495-500	205	272	350	< 1	0.99	8	210	< 5	192	0.20	28	48
RL-175 045-050	205	294	75	< 1	0.31	2	210	80	33	0.38	13	102
RL-175 095-100	205	294	40	< 1	0.28	7	240	< 5	101	0.51	43	98
RL-175 195-200	205	272	85	1	0.22	5	250	15	212	0.21	4	94
RL-175 245-250	205	294	65	< 1	0.23	6	230	15	174	0.12	< 1	96
RL-175 295-300	205	272	125	1	0.31	2	100	15	36	0.10	< 1	100
RL-175 345-350	205	294	215	2	0.27	2	80	45	36	0.10	< 1	122
RL-175 395-400	205	272	605	5	0.32	3	90	30	63	0.10	< 1	110
RL-175 445-450	205	294	555	3	0.33	2	90	20	75	0.09	< 1	84
RL-175 495-500	205	272	225	8	0.26	5	90	15	40	0.10	< 1	98
RL-175 545-550	205	294	260	4	0.25	2	80	115	49	0.09	< 1	126
RL-175 595-600	205	272	335	< 1	0.29	36	560	10	184	0.70	97	90

CERTIFICATION: B. Caylin

Chemex Labs Inc.

Analytical Chemists * Geochemists * Registered Assayers
994 West Glendale Ave., Suite 7, Sparks,
Nevada, U.S.A. 89431
PHONE: 702-356-5395

To: LAC MINERALS U.S.A. INC

1395 GREG ST., STE 107
SPARKS, NEVADA
89431

A9114884

Comments: ATTN: BOB THOMAS CC: GARFIELD MACVEIGH

CERTIFICATE A9114884

LAC MINERALS U.S.A. INC

Project:
P.O. # :

Samples submitted to our lab in Sparks, NV.
This report was printed on 23-MAY-91.

SAMPLE PREPARATION

CHEMEX CODE	NUMBER SAMPLES	DESCRIPTION
205	19	Geochem ring to approx 150 mesh
272	8	Crush and split (11-20 pounds)
294	11	Crush and split (0-10 pounds)
285	19	ICP - HF digestion charge

* NOTE 1:

Code 1000 is used for repeat gold analyses It shows typical sample variability due to coarse gold effects. Each value is correct for its particular subsample.

* NOTE 2:

The 32 element ICP package is suitable for trace metals in soil and rock samples. Elements for which the nitric-aqua regia digestion is possibly incomplete are: Al, Ba, Be, Ca, Cr, Ga, K, La, Mg, Na, Sr, Ti, Tl, W.

ANALYTICAL PROCEDURES

CHEMEX CODE	NUMBER SAMPLES	DESCRIPTION	METHOD	DETECTION LIMIT	UPPER LIMIT
1008	19	Al203 %: 20 element, rock ID	ICP-AES	0.01	50.0
565	19	Ba ppm: 24 element, rock & core	ICP-AES	10	10000
1009	19	CaO%: 20 element, rock ID	ICP-AES	0.01	35.0
563	19	Co ppm: 24 element, rock & core	ICP-AES	1	10000
569	19	Cr ppm: 24 element, rock & core	ICP-AES	1	10000
577	19	Cu ppm: 24 element, rock & core	ICP-AES	1	10000
1010	19	Fe203%: 20 element, rock ID	ICP-AES	0.01	35.0
1011	19	K2O %: 20 element, rock ID	ICP-AES	0.01	10.00
1006	19	La ppm: 20 element, rock ID	ICP-AES	20	10000
1012	19	MgO %: 20 element, rock ID	ICP-AES	0.01	35.0
568	19	Mn ppm: 24 element, rock & core	ICP-AES	5	10000
554	19	Mo ppm: 24 element, rock & core	ICP-AES	1	10000
1013	19	Na20 %: 20 element, rock ID	ICP-AES	0.01	10.00
564	19	Ni ppm: 24 element, rock & core	ICP-AES	1	10000
559	19	P ppm: 24 element, rock & core	ICP-AES	10	10000
1007	19	Pb ppm: 20 element, rock ID	ICP-AES	5	10000
582	19	Sr ppm: 24 element, rock & core	ICP-AES	1	10000
1014	19	Ti02 %: 20 element, rock ID	ICP-AES	0.01	10.00
572	19	V ppm: 24 element, rock & core	ICP-AES	1	10000
558	19	Zn ppm: 24 element, rock & core	ICP-AES	2	10000

Chemex Labs Inc.

Analytical Chemists * Geochemists * Registered Assayers
994 West Glendale Ave., Suite 7, Sparks,
Nevada, U.S.A. 89431
PHONE: 702-356-5395

To: LAC MINERALS U.S.A. INC

1395 GREG ST., STE 107
SPARKS, NEVADA
89431

Project :
Comments: ATTN: BOB THOMAS CC: GARFIELD MACVEIGH

Certificate Date: 23-MAY-91
Invoice No. : I9114884
P.O. Number :

CERTIFICATE OF ANALYSIS A9114884

SAMPLE DESCRIPTION	PREP CODE		Al2O3 % ICP	Ba ppm (ICP)	CaO % ICP	Co ppm (ICP)	Cr ppm (ICP)	Cu ppm (ICP)	Fe2O3 % ICP	K2O % ICP	La ppm ICP	MgO % ICP
RL-174 045-050	205	294	15.85	290	0.34	2	7	25	4.65	3.70	20	0.44
RL-174 095-100	205	294	10.90	460	0.13	4	14	8	2.13	1.30	40	0.14
RL-174 145-150	205	294	12.10	130	0.23	2	15	7	3.07	2.30	60	0.14
RL-174 195-200	205	294	13.25	300	0.21	2	9	3	2.39	2.50	80	0.17
RL-174 295-300	205	294	12.55	650	0.31	2	7	4	2.94	4.20	80	0.21
RL-174 345-350	205	272	10.90	250	5.52	1	8	2	2.92	3.00	60	0.16
RL-174 395-400	205	272	10.15	1480	0.33	1	6	2	3.39	1.70	60	0.14
RL-174 495-500	205	272	11.75	960	2.26	5	22	11	2.58	2.20	20	0.94
RL-175 045-050	205	294	13.55	340	0.07	3	11	10	3.31	3.40	40	0.35
RL-175 095-100	205	294	13.90	380	0.10	8	14	20	2.93	3.00	< 20	0.34
RL-175 195-200	205	272	10.75	300	0.13	4	11	11	3.23	2.40	20	0.14
RL-175 245-250	205	294	11.65	870	0.23	3	10	6	2.39	2.50	60	0.23
RL-175 295-300	205	272	13.35	610	0.17	2	9	4	2.42	4.40	80	0.10
RL-175 345-350	205	294	11.90	420	0.21	2	9	8	2.39	3.30	80	0.14
RL-175 395-400	205	272	13.15	630	1.14	2	7	5	3.19	5.00	80	0.19
RL-175 445-450	205	294	12.05	630	1.19	2	8	5	2.20	4.80	80	0.16
RL-175 495-500	205	272	12.55	400	0.22	2	11	5	2.45	2.10	80	0.13
RL-175 545-550	205	294	13.20	190	0.29	1	10	15	2.90	1.90	60	0.15
RL-175 595-600	205	272	15.30	1020	1.73	15	68	30	5.71	3.00	20	1.56

CERTIFICATION: B. Caylin

Chemex Labs Inc.

Analytical Chemists * Geochemists * Registered Assayers

994 West Glendale Ave., Suite 7, Sparks,
Nevada, U.S.A. 89431
PHONE: 702-356-5395

To: LAC MINERALS U.S.A. INC

1395 GREG ST., STE 107
SPARKS, NEVADA
89431

Project :
Comments: ATTN: BOB THOMAS CC: GARFIELD MACVEIGH

Certificate Date: 23-MAY-91
Invoice No. : I9114884
P.O. Number :

CERTIFICATE OF ANALYSIS A9114884

SAMPLE DESCRIPTION	PREP CODE		Mn ppm (ICP)	Mo ppm (ICP)	Na20 % ICP	Ni ppm (ICP)	P ppm (ICP)	Pb ppm (ICP)	Sr ppm (ICP)	Ti02 % ICP	V ppm (ICP)	Zn ppm (ICP)
RL-174 045-050	205	294	80	1	0.40	1	330	95	242	0.35	2	108
RL-174 095-100	205	294	55	2	0.18	8	250	20	159	0.10	< 1	98
RL-174 145-150	205	294	95	2	0.23	5	60	30	47	0.10	< 1	100
RL-174 195-200	205	294	380	3	0.22	3	120	5	25	0.11	< 1	90
RL-174 295-300	205	294	360	2	0.67	3	100	10	41	0.10	< 1	126
RL-174 345-350	205	272	1095	3	0.23	1	90	25	166	0.07	< 1	106
RL-174 395-400	205	272	275	6	0.20	3	90	20	36	0.08	< 1	92
RL-174 495-500	205	272	350	< 1	0.99	8	210	< 5	192	0.20	28	48
RL-175 045-050	205	294	75	< 1	0.31	2	210	80	33	0.38	13	102
RL-175 095-100	205	294	40	< 1	0.28	7	240	< 5	101	0.51	43	98
RL-175 195-200	205	272	85	1	0.22	5	250	15	212	0.21	4	94
RL-175 245-250	205	294	65	< 1	0.23	6	230	15	174	0.12	< 1	96
RL-175 295-300	205	272	125	1	0.31	2	100	15	36	0.10	< 1	100
RL-175 345-350	205	294	215	2	0.27	2	80	45	36	0.10	< 1	122
RL-175 395-400	205	272	605	5	0.32	3	90	30	63	0.10	< 1	110
RL-175 445-450	205	294	555	3	0.33	2	90	20	75	0.09	< 1	84
RL-175 495-500	205	272	225	8	0.26	5	90	15	40	0.10	< 1	98
RL-175 545-550	205	294	260	4	0.25	2	80	115	49	0.09	< 1	126
RL-175 595-600	205	272	335	< 1	0.29	36	560	10	184	0.70	97	90

CERTIFICATION: B. Caylin